Kliknij, by przejść do sklepu

INSTRUCTION SHEET

94133

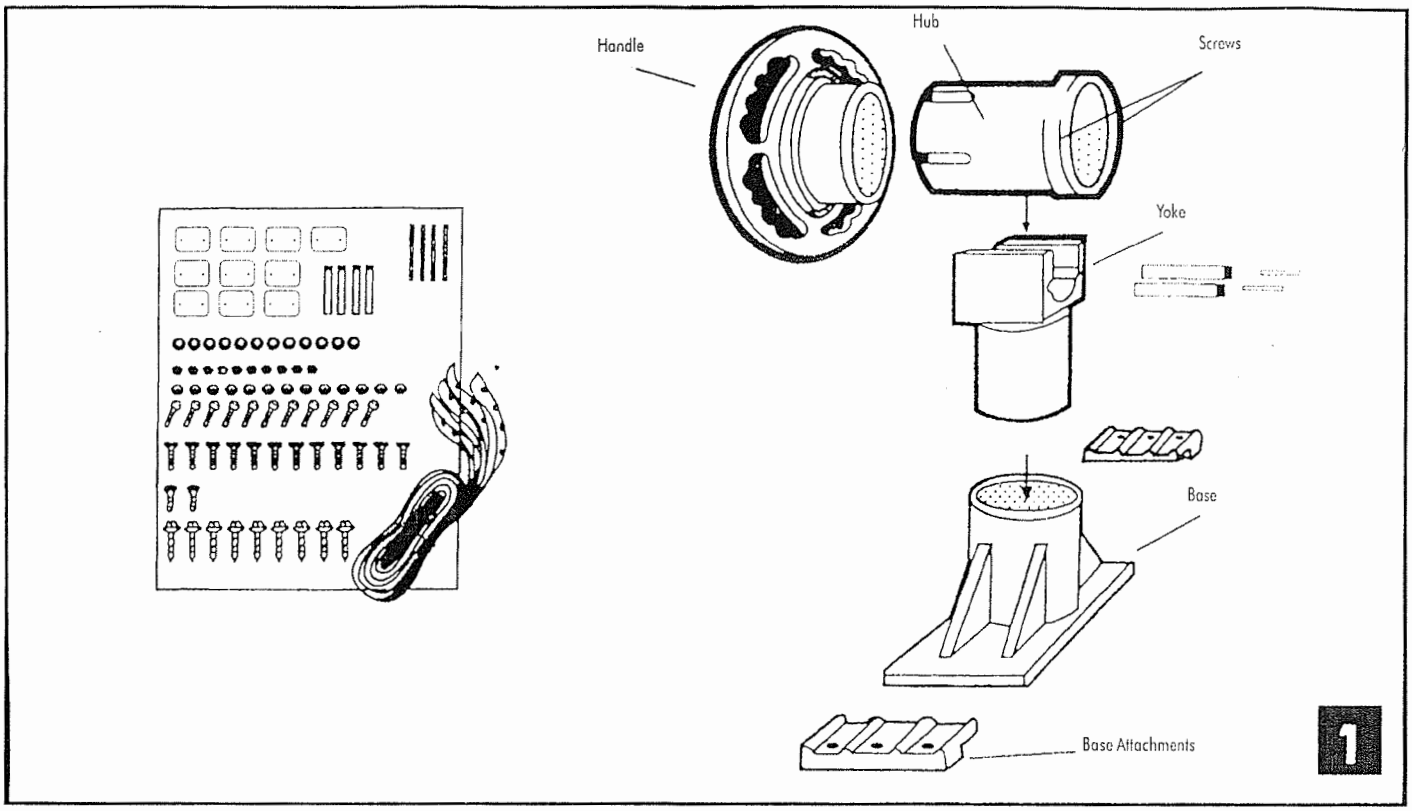

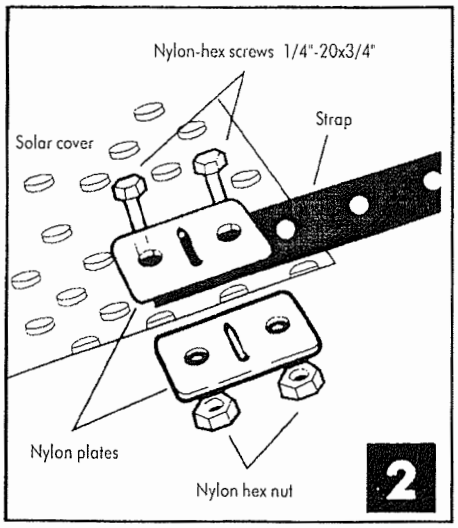

When you install the attachment kits, it must be at equal distance amongst them. The length of the attachment must be adjusted in regards with the shape of the pool.

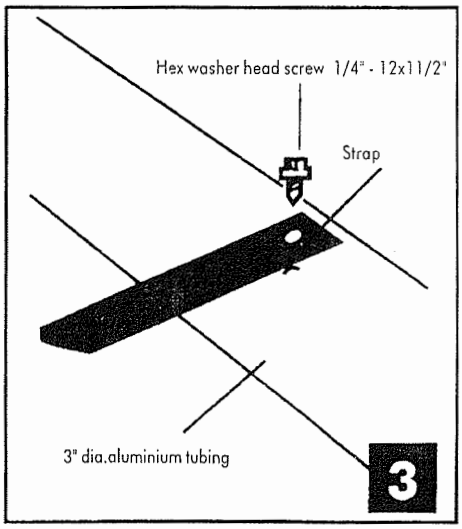

You must drill holes in aluminium tubing to fix straps which are already attached to sollar cover.

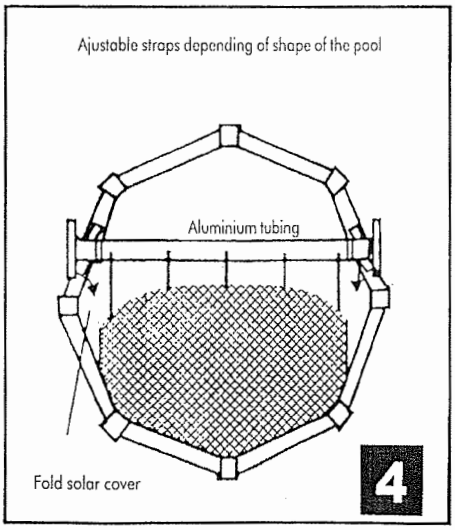

Fold overlap before rolling the cover.